MyHOME

H4650
LN4650
067590

H4651
LN4651
067591
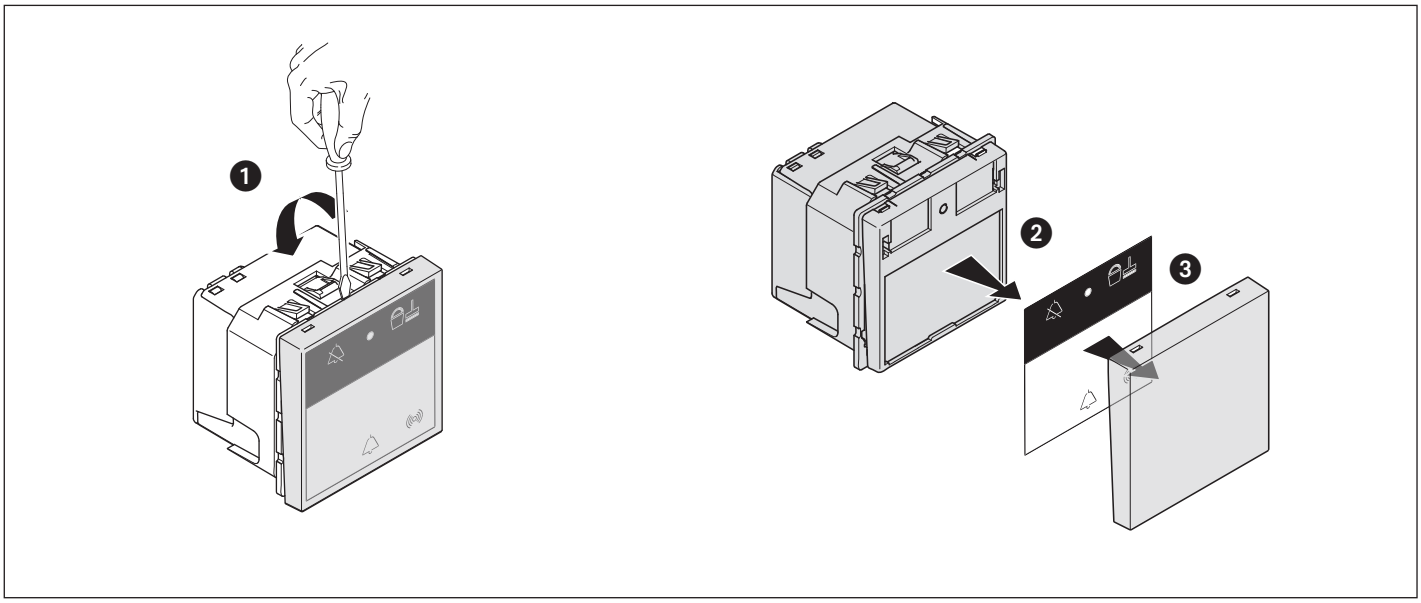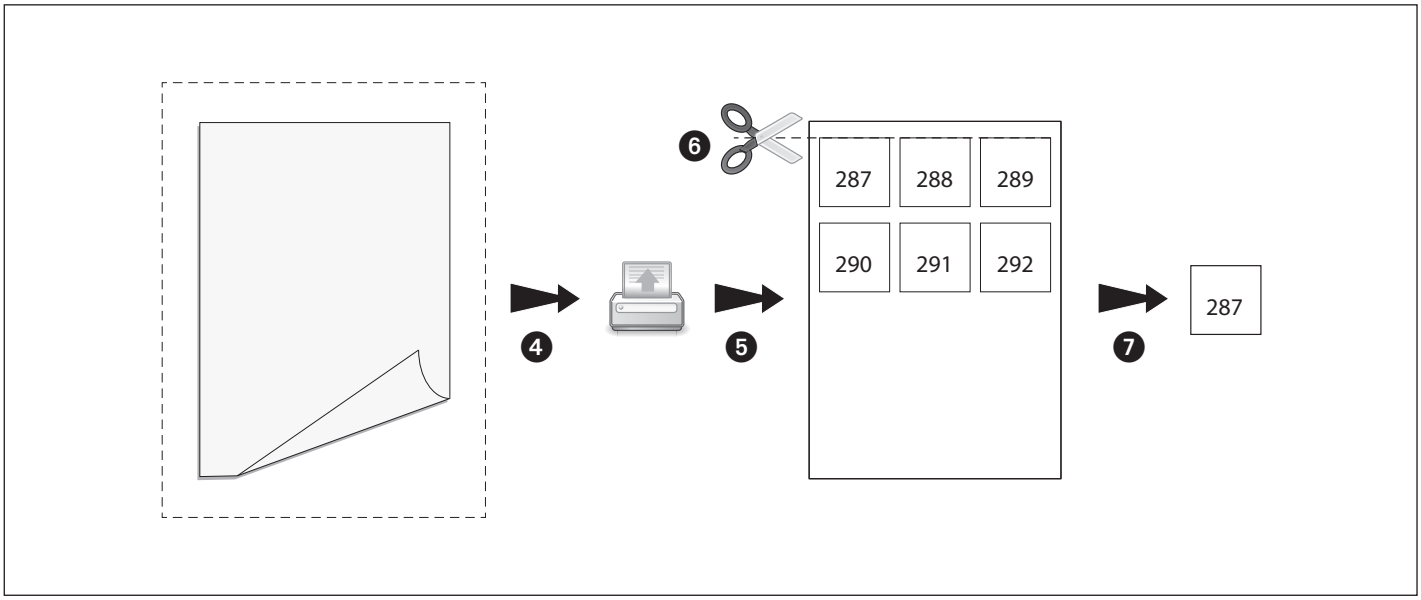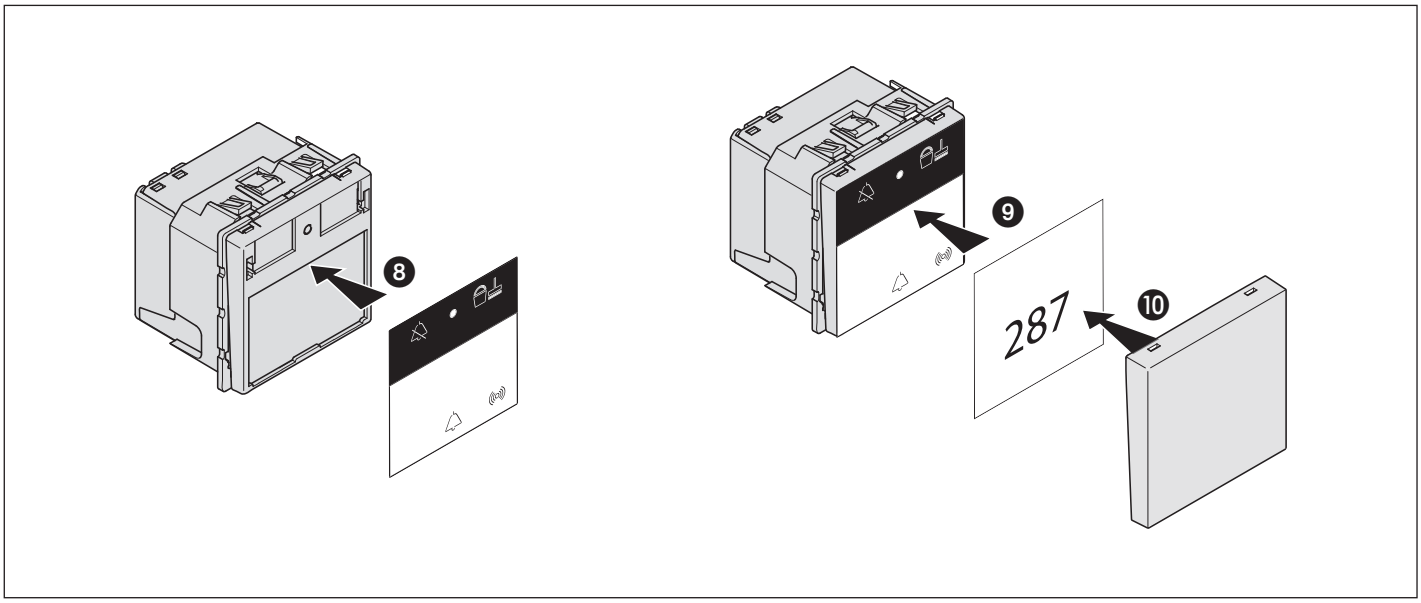
LE06116AB-01PC-14W12